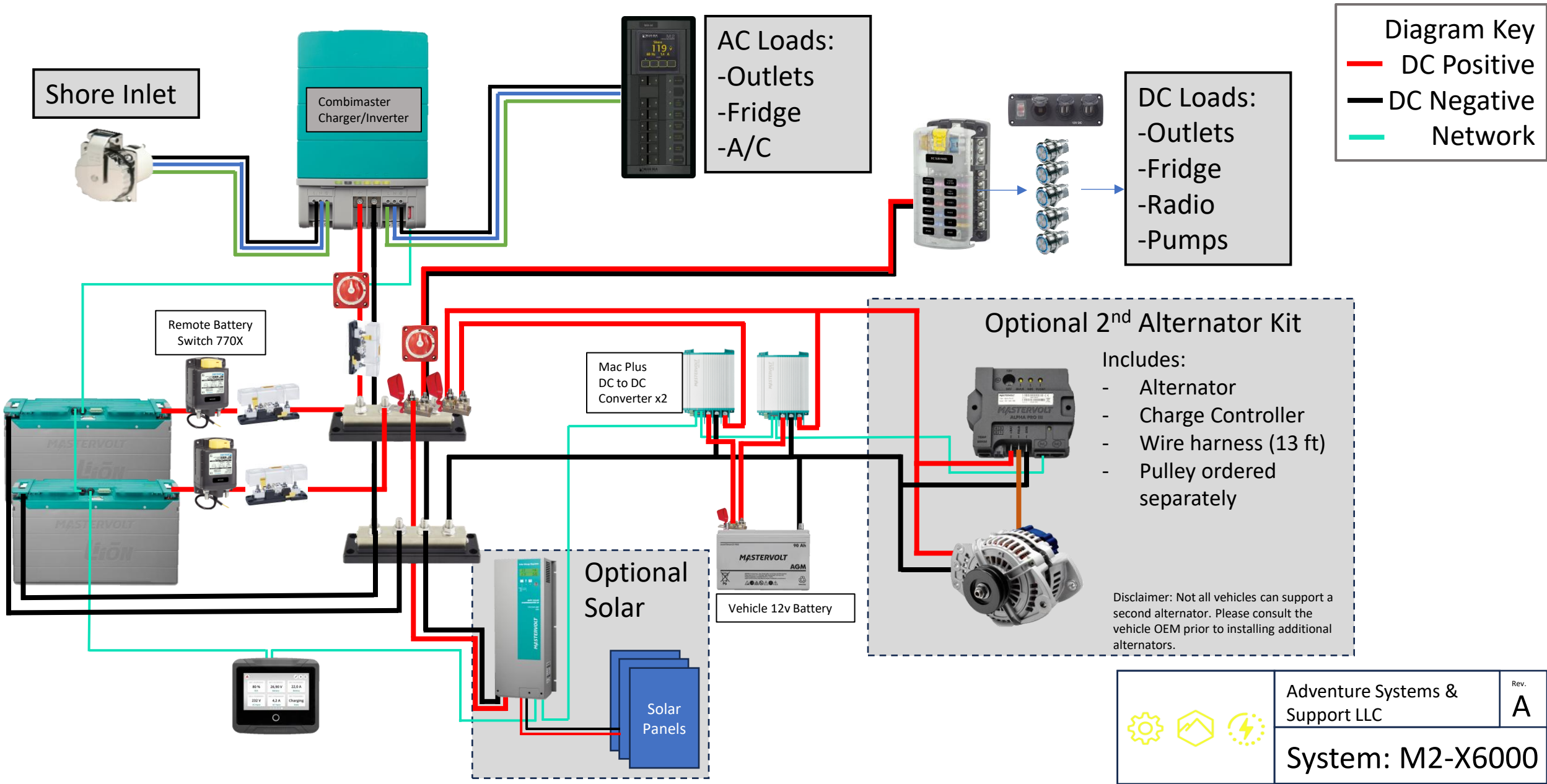
Diagram Key
DC Positive
DC Negative
Network
Shore Inlet
Combimaster Charger/Inverter
AC Loads:
-Outlets
-Fridge
-A/C
DC Loads:
-Outlets
-Fridge
-Radio
-Pumps
Remote Battery Switch 770X
Mac Plus DC to DC Converter x2
Optional 2nd Alternator Kit
Includes:
- Alternator
- Charge Controller
- Wire harness (13 ft)
- Pulley ordered separately
Disclaimer: Not all vehicles can support a second alternator. Please consult the vehicle OEM prior to installing additional alternators.
Vehicle 12v Battery
Optional Solar
Solar Panels
Adventure Systems & Support LLC
Rev.
A
System: M2-X6000